# COMMERCIAL
## LIGHTING

UPSHINE®

LED freestanding luminaire

## OL12 Series

## Introduction

This is a folding freestanding lamp which includes three parts: flat lamp body, lamp pole and lamp base. With a precise optical design (UGR<17, up 70% & down 30% lighting), it has direct lighting and indirect lighting, which ensures a more uniform and more comfortable lighting effect. Lamp Pole with: Plug, touchable 0-10V dimmer, light sensor, PIR sensor module and USB connector. The configuration of the luminaire is triggered by pressing a button and then it's fully automatic, the lighting control modules are interchangeable, which is very suitable for modern office environments. There has a wheel under the base to support easier movement or transportation.

## Features

- Folding design and rolling base support easier movement and transportation
- Precise optical design: Direct and indirect lighting
- CRI90 with high lumen efficiency, 120lm/W@4000K
- Daylight sensor and PIR sensor mode interchangeable
- UGR<17 anti-glare design
- USB charging function available
- Plug and play, convenient for different position
- Touchable dimming for CCT(3000K-4000K) and brightness

## Application Areas

It is specially designed for general lighting applications in office, meeting room,studio, study room etc.

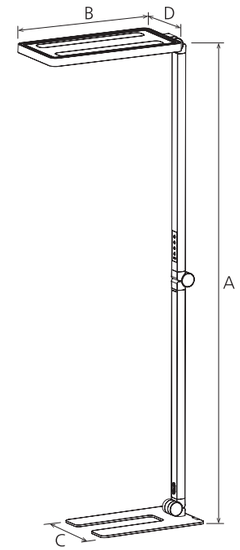


80° 120° | SLIDE SWITCH 2 in 1 | IP20 | IK06 | Flicker Free | AC 220-240V | PF≥0.9 | CRI≥90 | RoHS | CE

## Technical Data Sheet

| Code | | | OL12-80W-S1T | OL12-100W-S1T |
|---|---|---|---|---|
| Dimension(mm) | | | L2100*W726*H320 | L2100*W726*H320 |
| Cutout(mm) | | | - | |
| Watt(W) | | | 80W | 100W |
| USB Output | | | 1 Groups USB 5V 2000mA | |
| Rated Input Voltage | | | AC220-240V | |
| Input Voltage | | | AC198-264V | |
| LED Module Input | | | - | |
| Light Source | | | SMD | |
| SDCM | | | SDCM<6 | |
| CCT(K) | | | 3000K-4000K | |
| CCT Selection DIP Switch | | | Touch | |
| Luminous Flux (lm) ±5% CRI90 | 2-CCT | DIM | 9440-9600 | 11800-12000 |
| CRI | | | 90 | |
| Beam Angle(°) | | | UP 80°/ Down 120° | |
| UGR | | | UGR<17 | |
| LED Driver | | | Driver built-in | |
| Dimming Option | | | Touch | |
| Sensor | | | PIR sensor / Daylight sensor | |
| Emergency Kits | | | - | |
| Electrical Class | | | Class I | |
| Ingress Protection(IP Rating) | | | IP20 | |
| Impact Resistance(IK Rating) | | | IK06 | |
| Product Finishing | | | White RAL9016/Black RAL9005 | |
| Optics Material | | | PMMA | |
| Housing Material | | | AL6063 | |
| Lifetime(hr) | | | 50,000H | |
| Glow wire test(℃) | | | 650℃ | |
| Operating Temp(℃) | | | -10℃~40℃ | |
| Storage Temp(℃) | | | -20℃~60℃ | |
| Installation | | | Pedestal mounted | |

## Measurement

| Code | Dimension(mm) | | | | Size(mm) | Product Weight (Kg) | Package weight (Kg) | Carton Size(cm) | Qty/ CTN | 20GP (pcs) | 40HQ (pcs) |
|---|---|---|---|---|---|---|---|---|---|---|---|
| | A | B | C | D | | N.W/PC | G.W/CTN | | | | |
| OL12-80W-S1T<br>OL12-100W-S1T | 2100 | 764 | 320 | 310 | 2100*726*320 | 14.5 | 22.6 | 120*31*44 | 1 | 155 | 325 |

## Driver Datasheet (Constant Voltage Linear Driver)

| Total load wattage | | 80W | 100W |
|---|---|---|---|
| Output | Rated output current | 2100mA | 2600mA |
| | Output Voltage range | DC32-40V | |
| | Line Regulation | ±5% | |
| | Setup Rise Time | <0.7S | |
| | Flickering Index | 2% | |
| | IEC-PST | <1 | |
| | CIE(SVM) | <0.4 | |
| Input | Rated Input Voltage | AC220-240V | |
| | Input Voltage | AC198-264V | |
| | Frequency | 50/60Hz | |
| | Rated Input Current | ≤0.41A | ≤0.51A |
| | Input Current | ≤0.45A | ≤0.57A |
| | Power Factor | 0.9 | |
| | THD | ≤20%@230V | |
| | Efficiency | 87% | |
| | Inrush current | 39A/358us | |
| | No load wattage | ≤0.5W | |
| | Stand-by power consumption | ≤0.5W | |
| Protection | Short circuit protection | PASS | |
| | Over voltage protection | PASS | |
| | Over temperature protection | PASS | |
| Safety & EMC | Withstand voltage | I/P-FG:1.5KVac,<5mA 60S | |
| | Isolation Resistance | 500VDC, ≥2M Ω | |
| | Surge | IEC/EN61000-4-5 (L-N:1KV, L/N-PE:2KV) | |
| | EMC Emission | EN55015, EN61000-3-2 | |
| | EMC Immunity | EN61000-4-2,3,4,5,6,8,11; EN61547 | |

# Driver Datasheet (Sensor)

| Sensor datasheet | |
|---|---|
| Operating voltage | 5VDC |
| Microwave frequency | - |
| Detection angle | 90° |
| Detection Area | 1.5m |
| Hold time | 15min |
| Daylight sensor | 500-1000LUX |
| Stand-by DIM Level | - |
| Stand-by Period | - |
| Dimming Range | 1%-100% |
| Microwave ON/OFF function | yes |
| Installation Height | - |
| Operating temperature(℃) | -20℃~35℃ |

## Button Function Instruction(USB version)

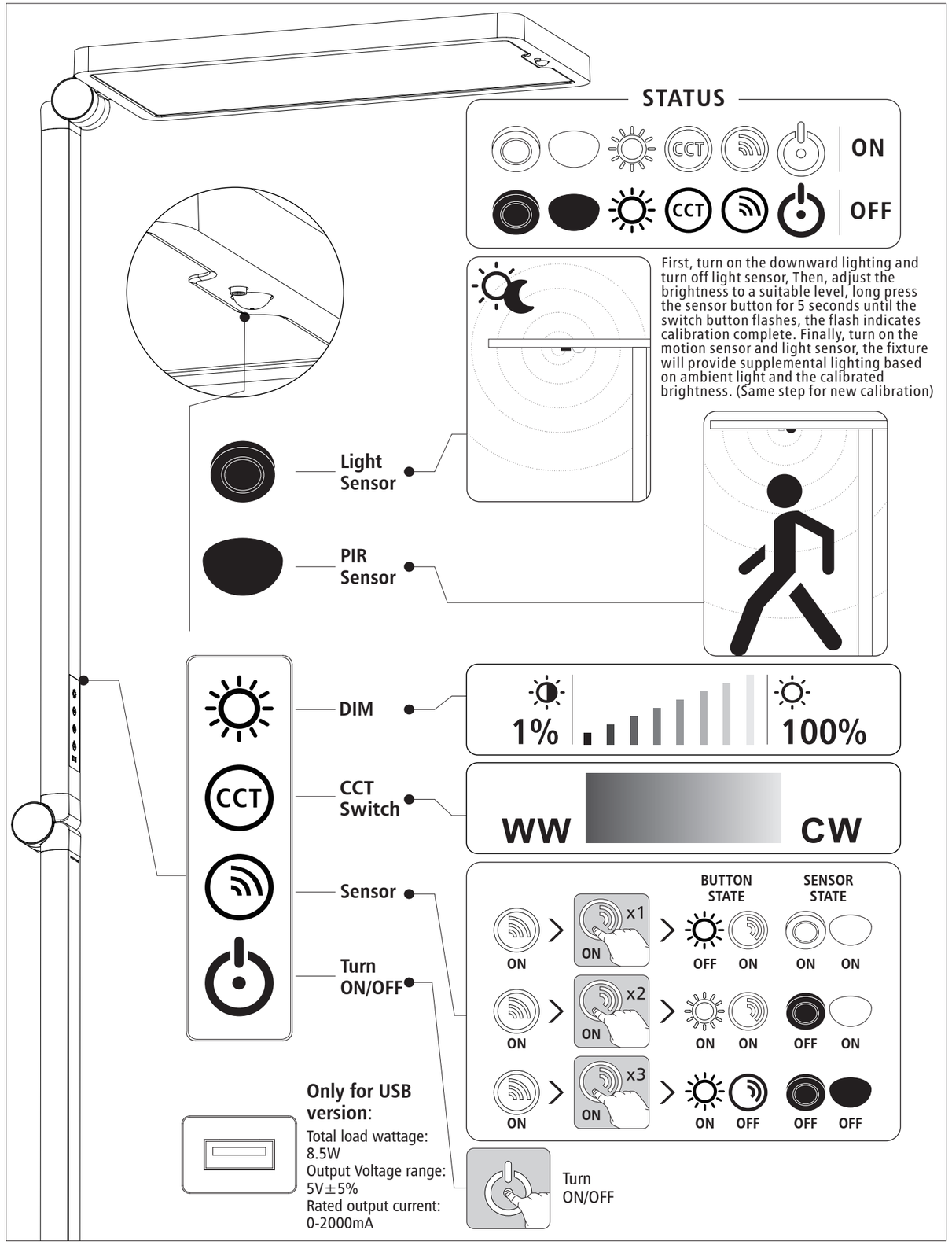

## Installation Procedure

**WARNING**

1.Switch off before installation.
2.Switch on only after complete installation and examination of the circuit.
3.Professional electrician for installation and maintenance only.

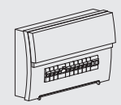

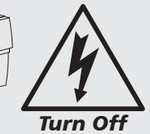

***Turn Off Power Supply***

## Pedestal installation

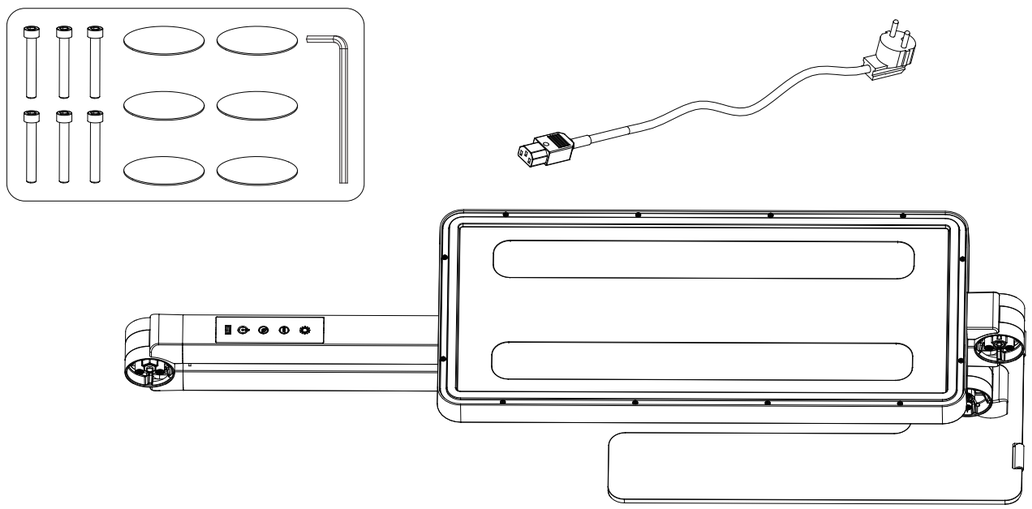

1

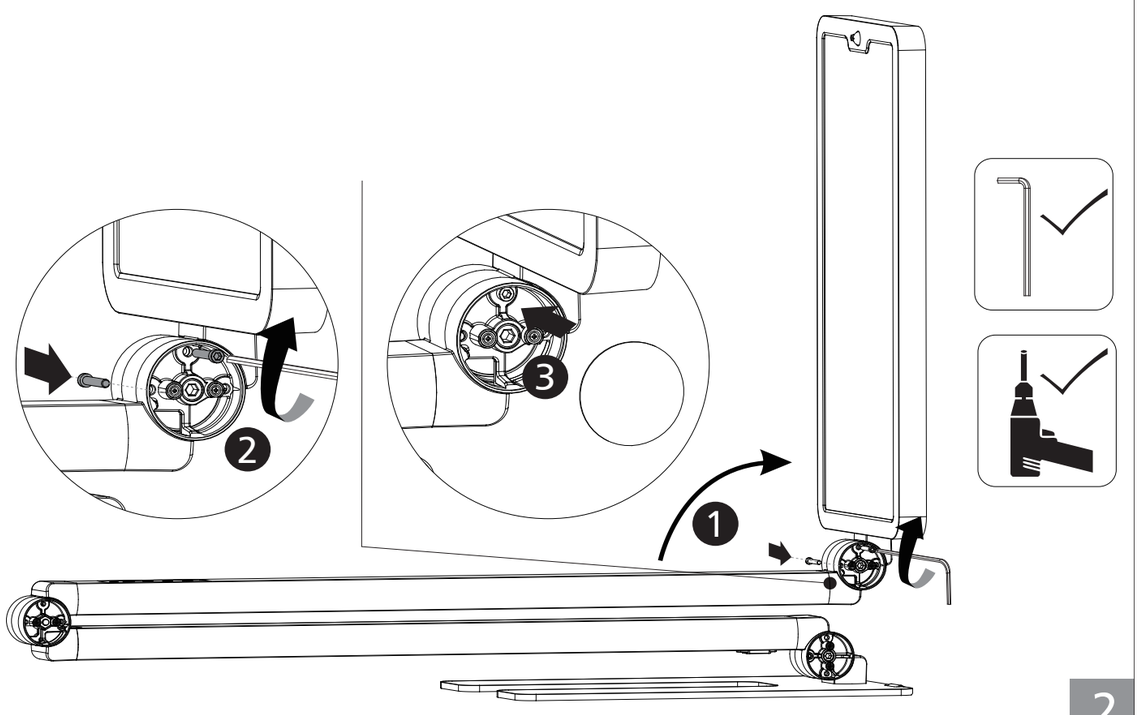

2

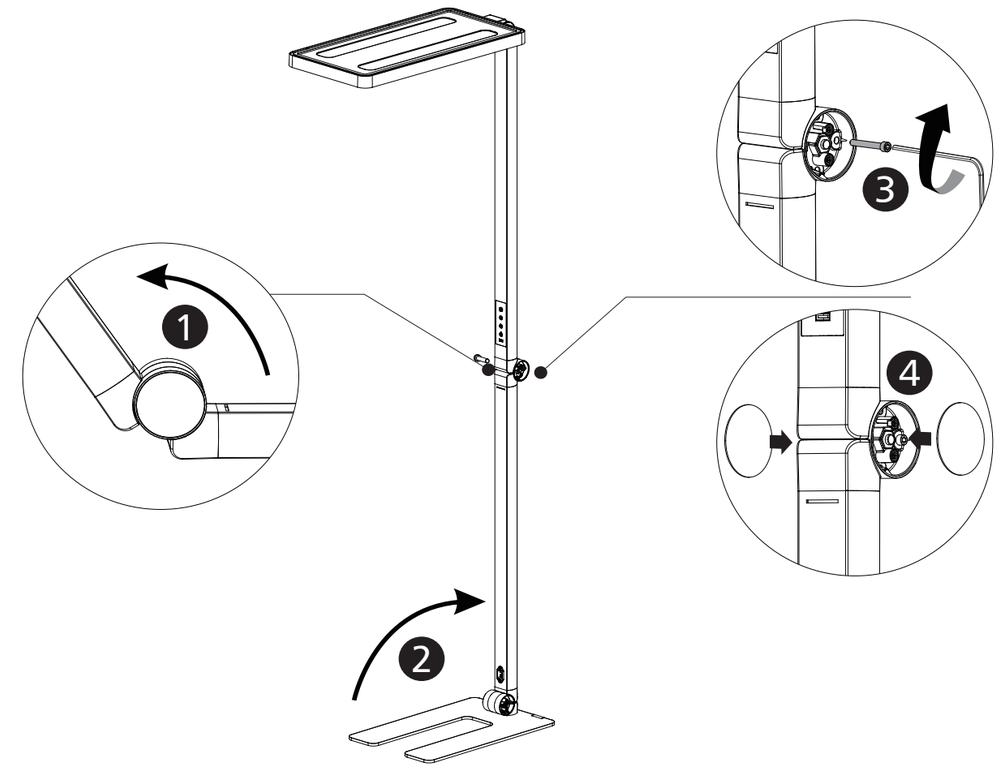

3

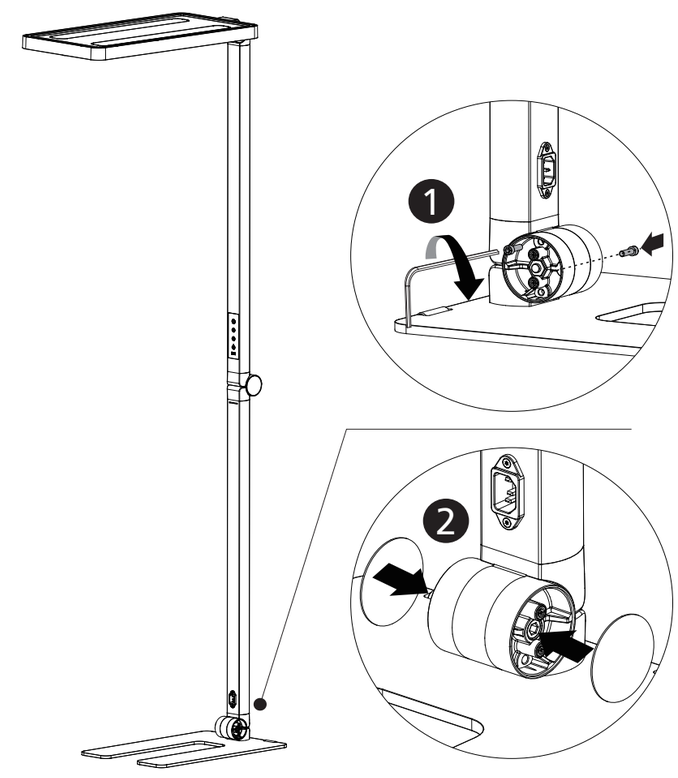

4

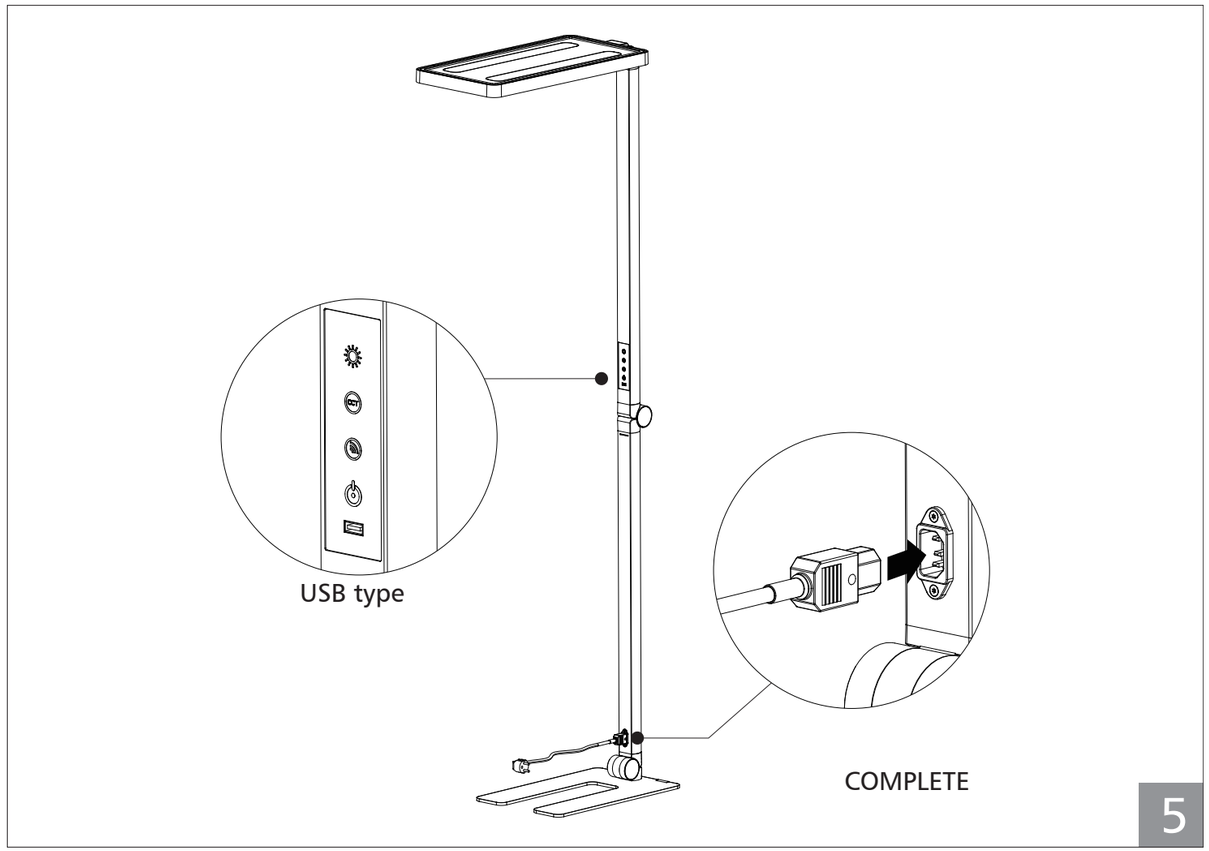
USB type
COMPLETE
5

Up to Shine, there is life

Add : 2nd building Dingfeng
High-Tech Zone, Fuyuan 1st Road,
FuYong Sub-district, Bao'an,
Shenzhen China 518103

Up-shine Lighting Co.,Limited

Tel : +86-755-2919 7332
Fax : +86-755-2919 7301
E-mail : info@upshine.com
Web : www.upshine.com